VECTOR BOOSTRAL 7820

1.2 GHZ SEGMENTABLE OPTICAL NODE 2X2

- 1.2 GHz Technology
- 200 MHz Technology
- GaN Technology
- Electronic control
- VMC (VECTOR Mobile Commander)
- Electronic adjustment
- NMS transponder
- VIG (VECTOR Ingress Guard)
- Integration of optical passives
- GREEN mode

SPECIFICATIONS

FORWARD PARAMETERS	
Wavelength	1260 - 1620 nm
Bandwidth	85...258 - 1218 MHz
Optical input power range	- 9.9 - 2 dBm
Optical AGC range	- 7 - 0 dBm
Flatness	± 0.5 dB
Equivalent Input Noise Current	5 pA / √Hz
Output level: CTB ≤ - 60 dBc CSO ≤ - 60 dBc	 2 x 117 dBµV 2 x 119 dBµV
Umax	2 x 112 dBµV
Gain limited output level	2 x 119 dBµV
Number of outputs	2 active, up to 3 with passive splitting
RETURN PARAMETERS	
Bandwidth	5 - 65 ... 204 MHz
Flatness	± 0.5 dB
Optical output power	3 or 6 dBm ± 0.5 dB
Min RF input level to get 10% OMI	70 dBµV
NPR / Dynamic range	40 dB / 5 dB
OTHERS	
Return loss	> 18 dB
AC voltage range: remote powering	30 - 65 V AC
Max. current for RF / AC IN ports	10 / 15 A
Power consumption	< 49 W
Operation temperature range	- 40 - 60 °C
Optical connectors	SC / APC
RF connectors	3 x PG11
Protection class	IP 67
Dimensions (W x L x H)	255 x 234 x 128 mm
Weight	< 4.0 kg

© 2019 Normann Engineering GmbH • Linzer Str. 139 • A-4600 Wels • T +43 (0) 7242 70 921-0 • office@normann-engineering.com • Irrtum, Satz- und Druckfehler vorbehalten

BLOCK DIAGRAM

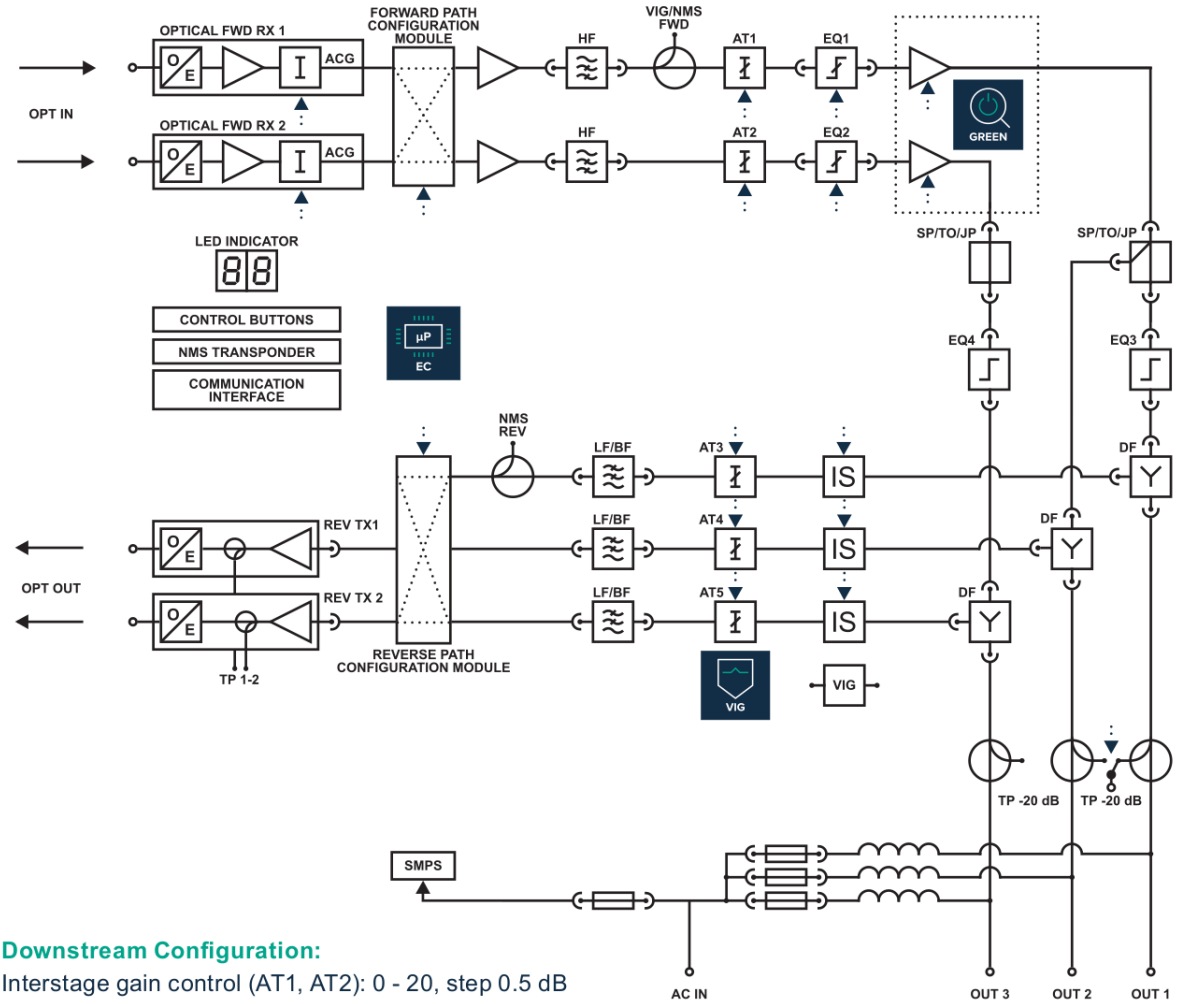

Downstream Configuration:
Interstage gain control (AT1, AT2): 0 - 20, step 0.5 dB
Interstage slope control (EQ1, EQ2): 0 - 20, step 0.5 dB
Output (Bridge ports) slope control (EQ3): 0 - 20, step 1.0 dB

Upstream Configuration:
Input gain control (AT3, AT4, AT5): 0 - 20, step 0.5 dB
Ingress switches: 0, -6, -∞ dB

ORDERING INFORMATION

AVAILABLE VERSIONS	
BOOSTRAL 7820 489Y	remote powering; max. config: 2Rx x 2Tx